Tecle Polipasto Prowinch c/carro electrico Monoviga 6.3 Tons trifasico

Características Esenciales

- 3 Años de Garantía, Partes y Servicios Disponibles en América

Especificaciones Técnicas

Capacidad de Carga	6000 kg / 13 889 lb	**Reductor de Izaje**	Sew Eurodrive G77
Altura de Izaje Estandard (Customizable)	40 ft / 12 m	**Tipo Transmisión / Reductor**	Sew Eurodrive G77
Velocidad /min	2.62 - 16.4 ft/min / 0.8 - 5 m /min	**Relación de Transmisión**	87.32
Numero de Velocidades	2 Speed	**Cable**	Ø 8.8 mm K19S IWRC 2160
Voltaje	3 Phase 208~240/440~480V 50/60Hz	**Humedad**	<85%
Clase de Servicio	H4/M5/2m/Class D	**Temperatura**	-4°~104° F / -20°~40° C
Tipo de Motor	Squirrel Cage Induction Motor	**Reductor Carro**	SEW Eurodrive RF17
AMP Motor	12.7 A (@ 380v)	**Motor Carro**	SEW Eurodrive DRN71M4
RPM Motor	2930 / 470 rpm (@50hz)	**Potencia del Trolley**	0.37 ~ 0.64 kW
Freno Motor	Sew Eurodrive BE5 Electromagnetic Release Brake >125%	**Nivel de Ruido**	82 dB
Grado de Aislacion	F	**Velocidad del Trolley /min**	16 ~ 65 ft/min. / 5 ~ 20 m/min
Protección IEC Motor	IP55	**Cantidad de Velocidades**	2
Protección Tablero de Control	IP65	**Rango de ancho de la Viga**	7.9~13.7 in / 200~350 mm
Freno Dinámico	Included	**Normas**	ASME HST-4 , ASME B30.16 , B30.17 , EN14492-2 , EN60204-32
Control	Pendant Control and Remote Control Telecontrol F24-6D	**Garantía**	3 Year
Voltaje del Control	48V	**Hoist Contactor Brand**	Schneider or EATON
Marca Motor de Izaje	Sew Eurodrive DRS132M12		

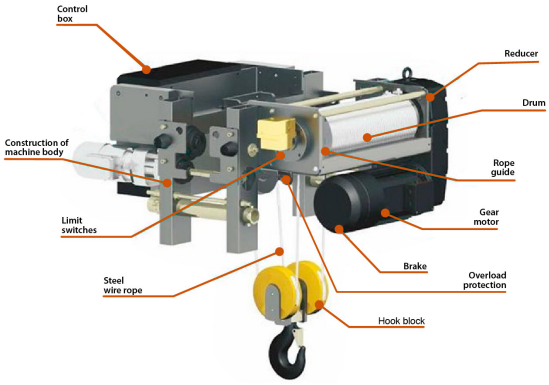

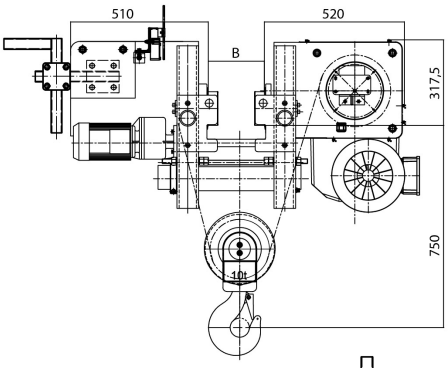

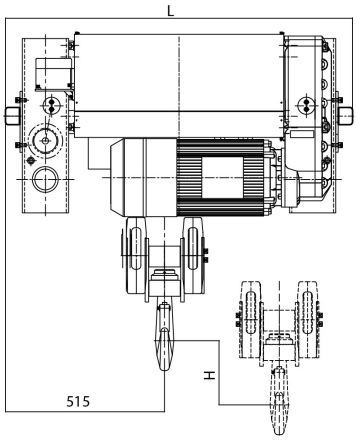

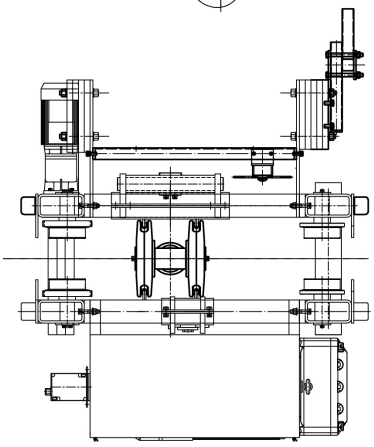

DRIVE TECHNOLOGY

SEW Eurodrive high performance Motor, reducer and brake. Compact design, light weight, low energy consumption, low noise and eco-friendly design. Electromagnetic brake disc (Asbestos-free). Long Service life and easy maintenance.

OVERLOAD PROTECTION

Load Cell connected to a Limit Relay (Adjustable) to avoid overloading of the hoist.

WIRE ROPE GUIDE

Helps the winding of the rope on the drum. Light weight and highly resistence. Design to reduce friction on the wire rope and avoid premature wear.

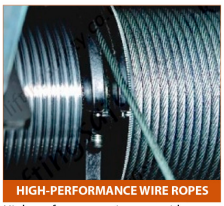

HIGH-PERFORMANCE WIRE ROPES

High-performance wire rope with tensile strength up to 2160Mpa. Galvanized surface and high flexibility to ensure long service life.

DRUM

Q345 steel, seamless grooved drum. Design to fulfill FEM and ASME standards and ensure a safe operation.

LIMIT SWITCHES

High precision adjustable height limit switches, for all movements of hoist and trolley.

LIFTING HOOK GROUP

DIN standard lifting hook with safety clasp. Forged by the high-strength material of T grade.

CONTROL BOX

Electric Control box with Schneider Inverter, Eaton contactors and components.
Compact design, easy access, IP65 Enclosure.

Detalles del Empaque